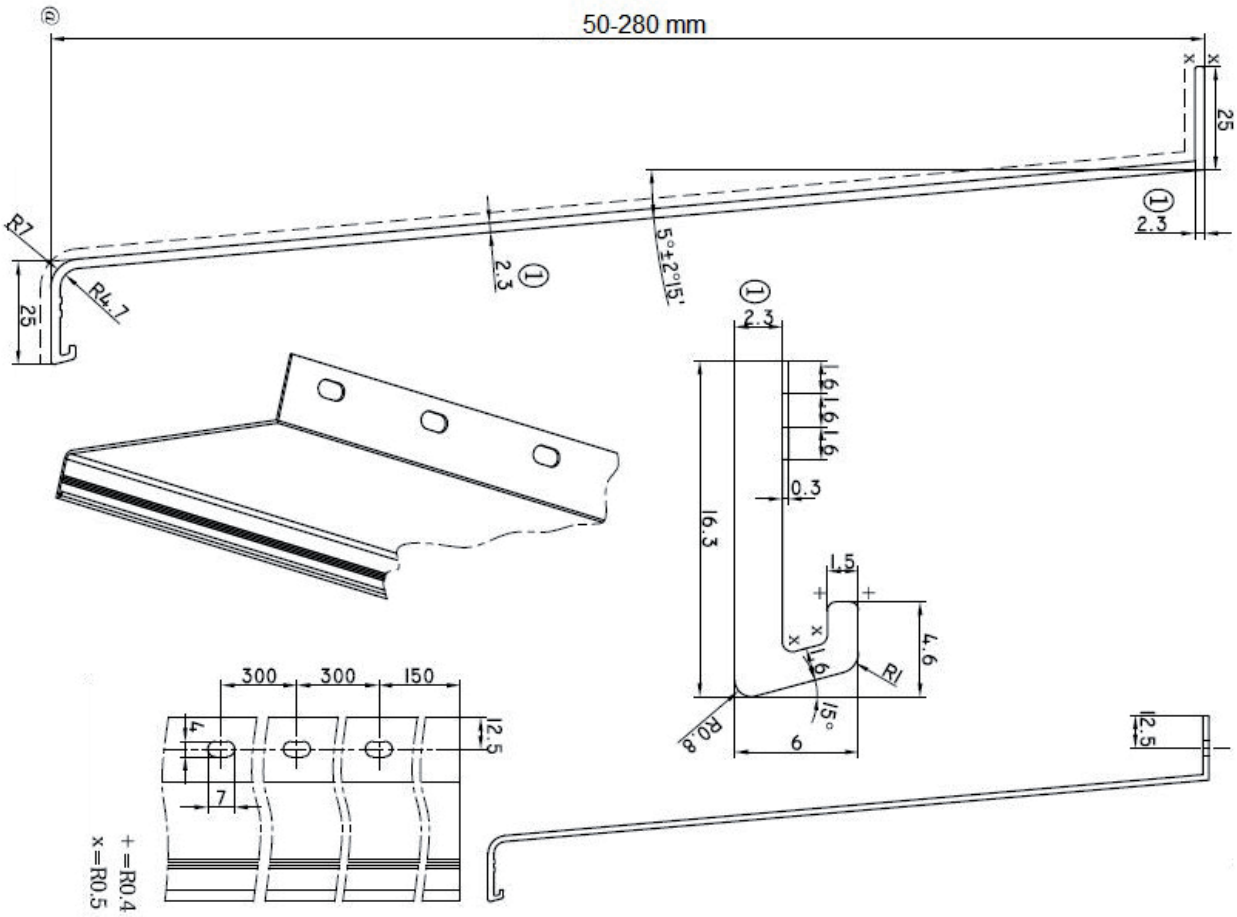
50-280 mm
@
25
2.3
5°±2°15'
R7
R4.7
1.9
0.3
16.3
1.5
4.6
R1
1.6
15°
R0.8
6
12.5
300
150
4
7
+ =R0.4
x =R0.5

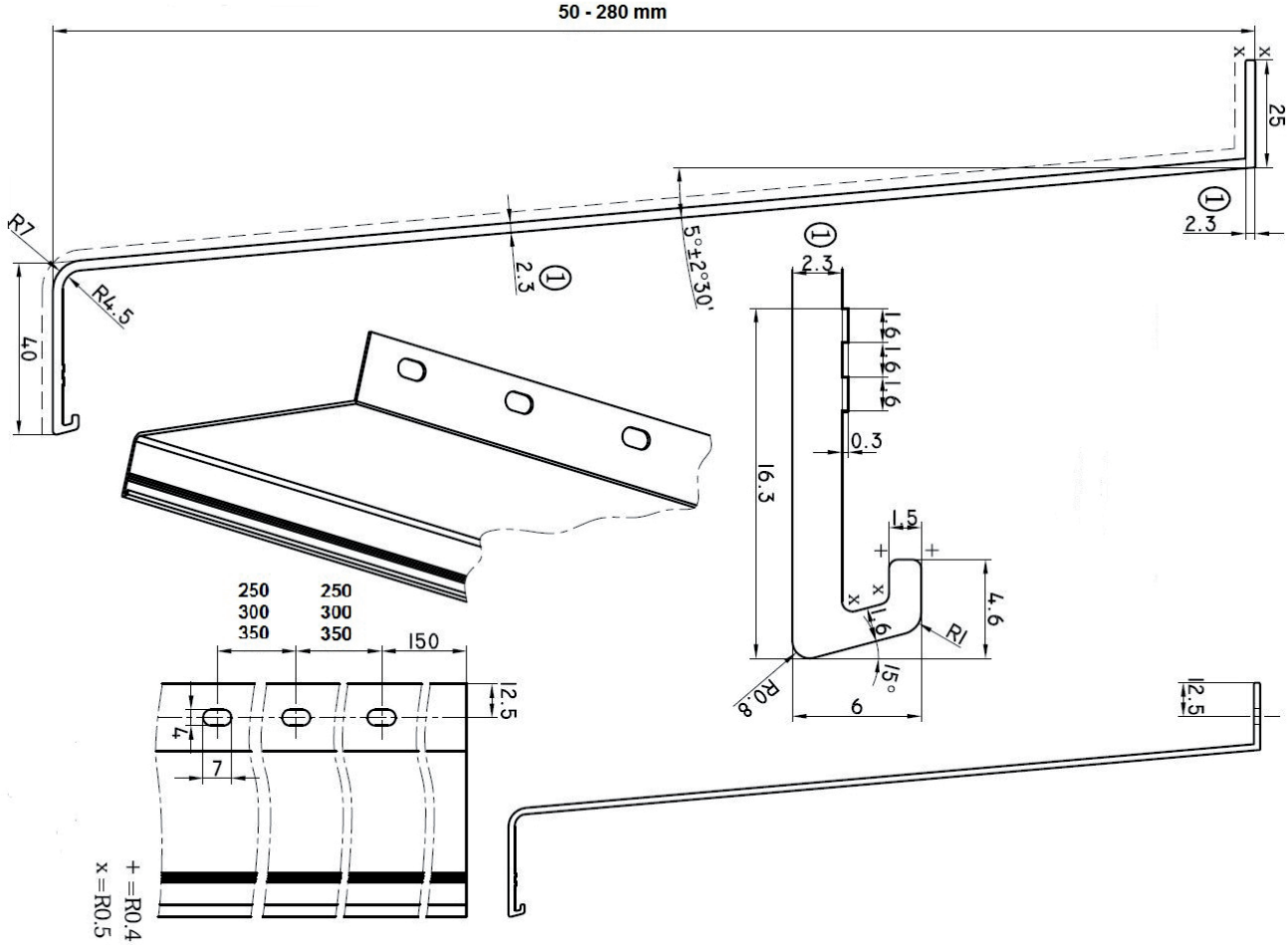
50 - 280 mm
25
2.3
5°±2°30'
R7
R4.5
40
16.3
0.3
1.5
4.6
R1
R0.8
15°
6
12.5
250
300
350
150
4
7
+ =R0.4
x =R0.5